Configuring a 6" x 6" Junction Box when Using X-10 Remote Control System
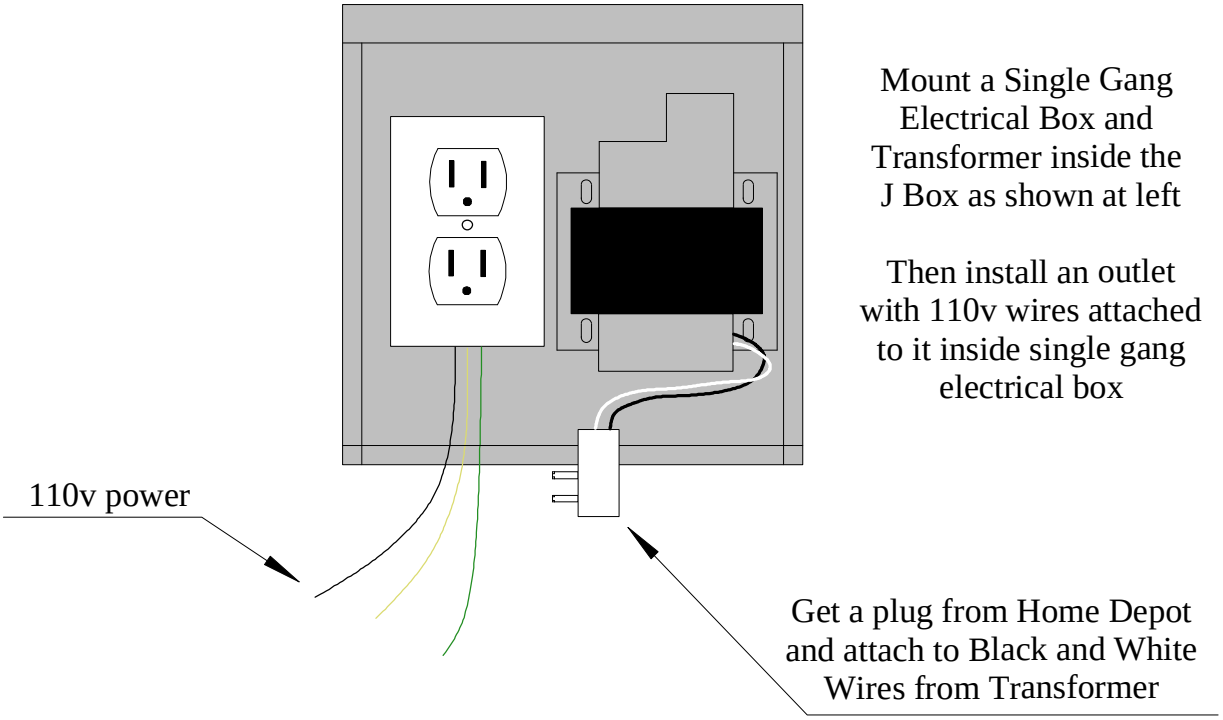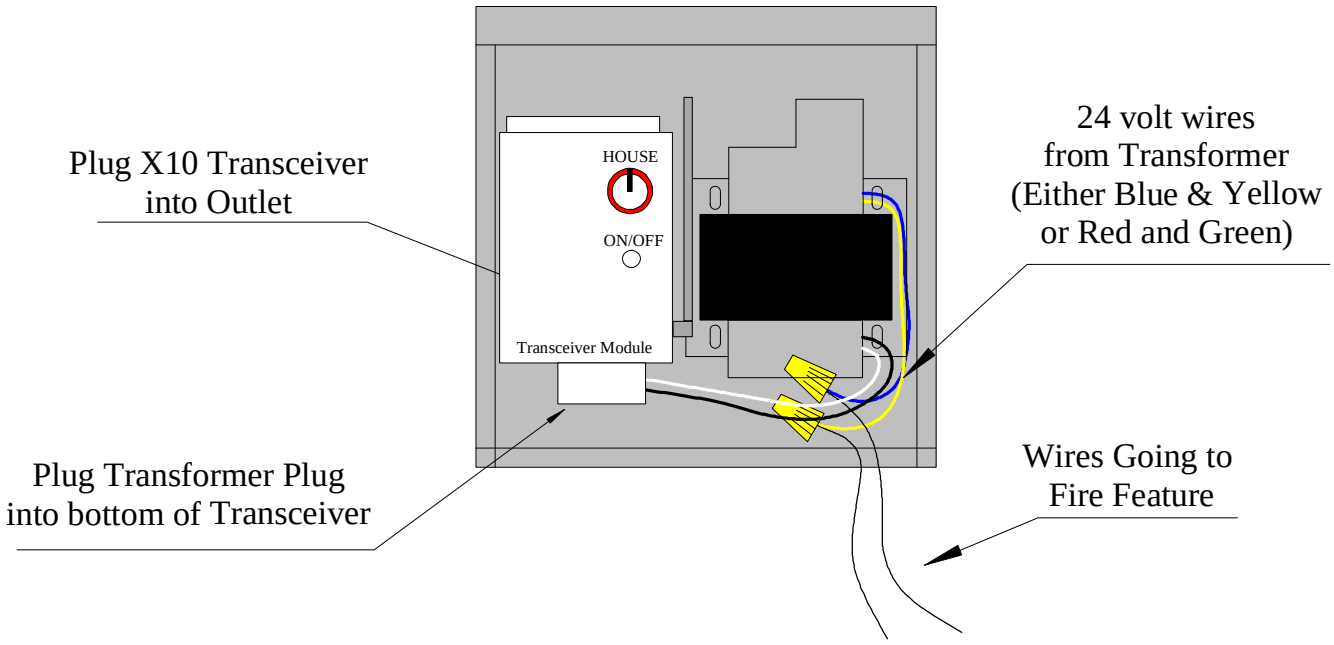
6" x 6" Exterior Junction Box with Outlet and Transformer